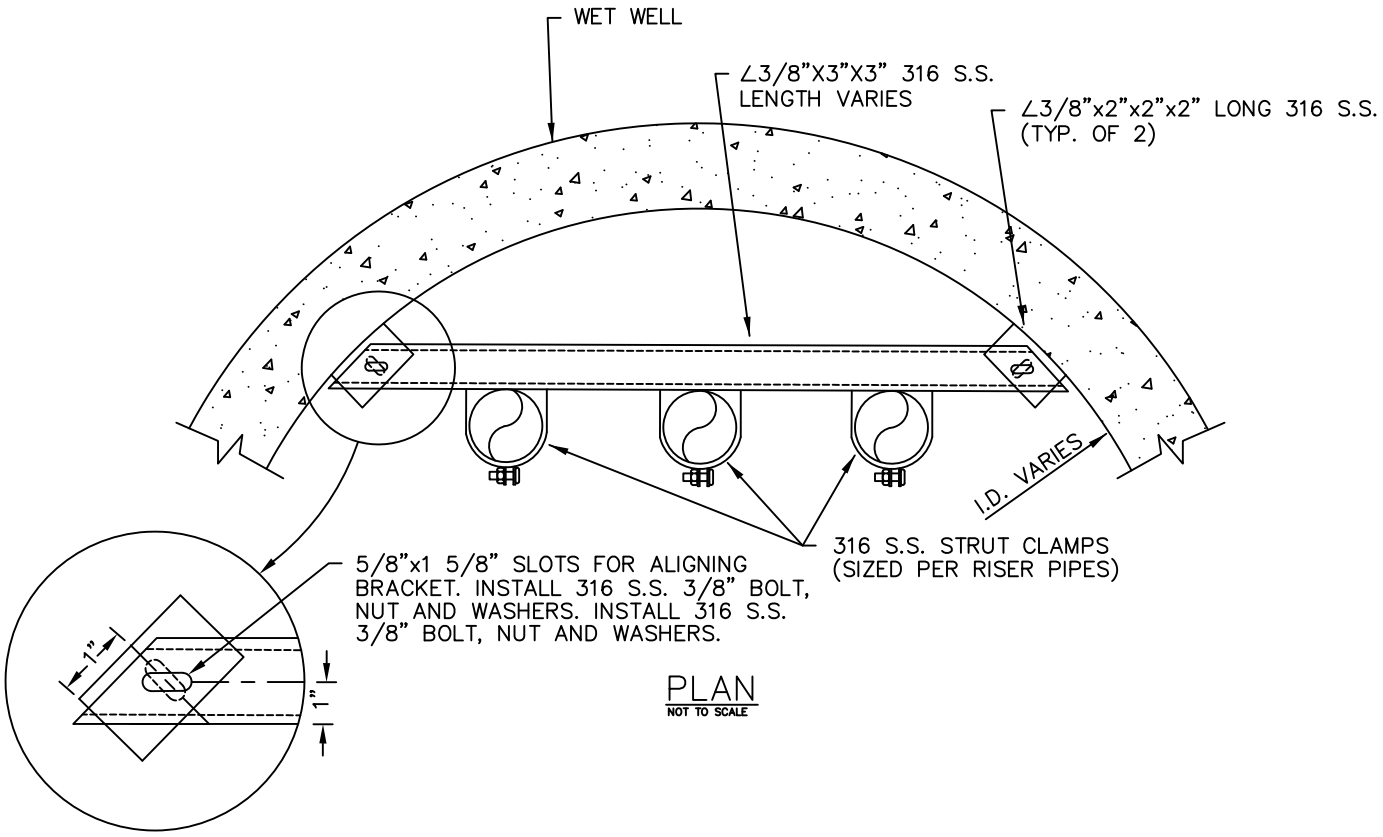

PLAN
NOT TO SCALE

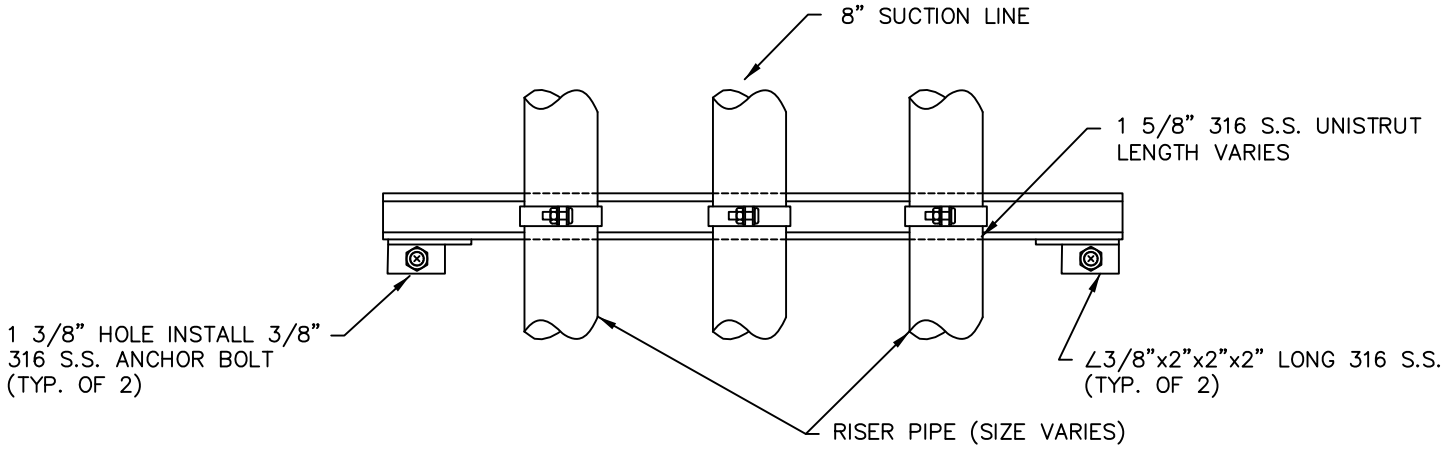

ELEVATION
NOT TO SCALE

RISER PIPE SUPPORT BRACKET DETAIL